TS COMPAKT

WN 058201 45532, 09/12

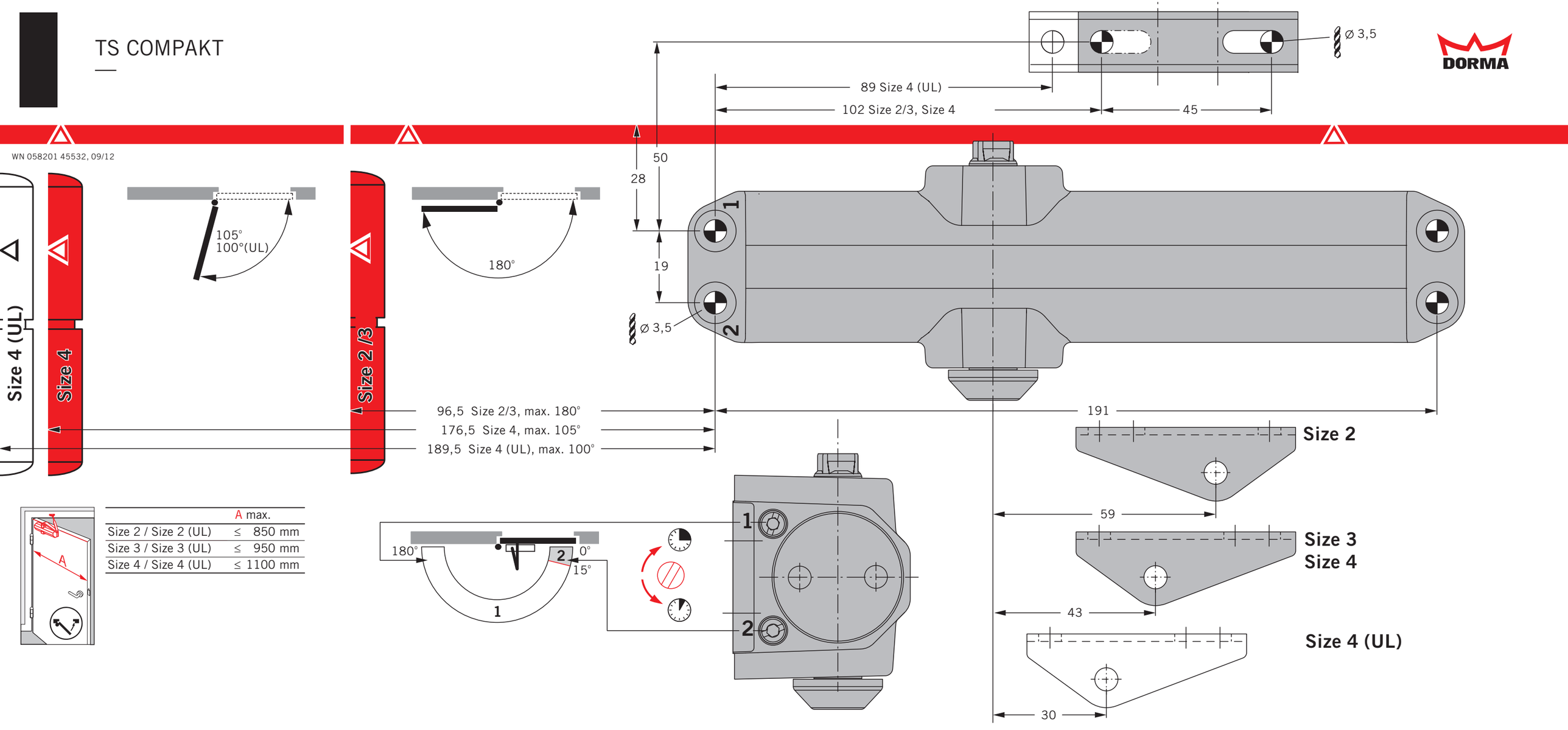

	A max.
Size 2 / Size 2 (UL)	≤ 850 mm
Size 3 / Size 3 (UL)	≤ 950 mm
Size 4 / Size 4 (UL)	≤ 1100 mm

TS COMPAKT

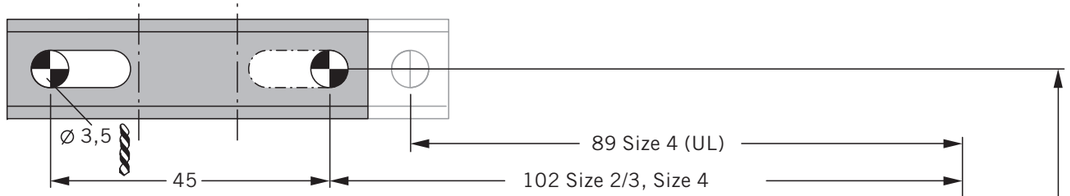

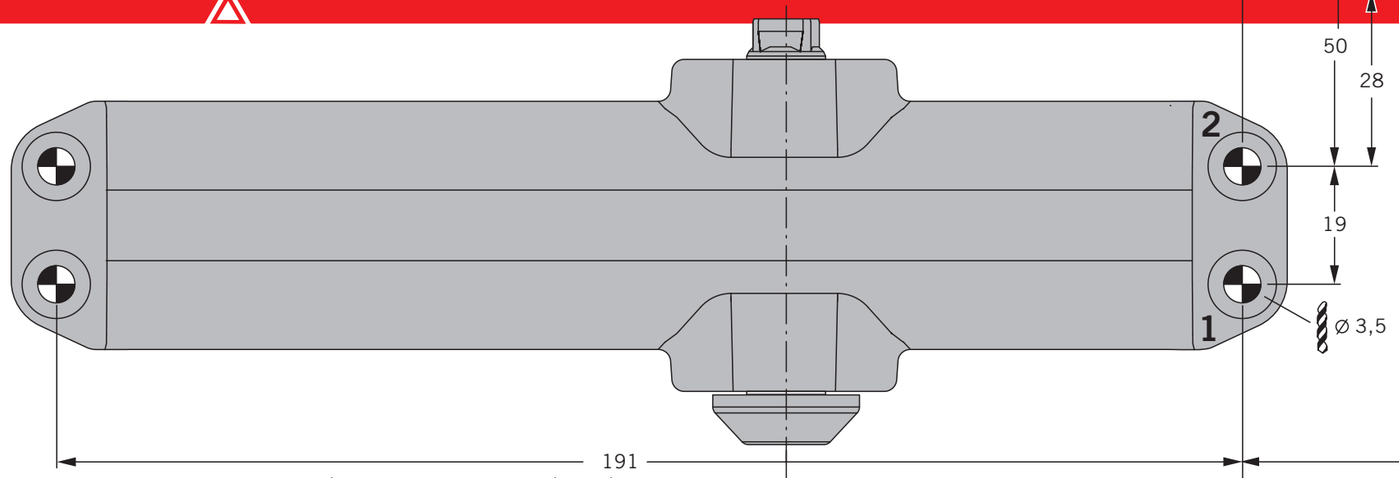

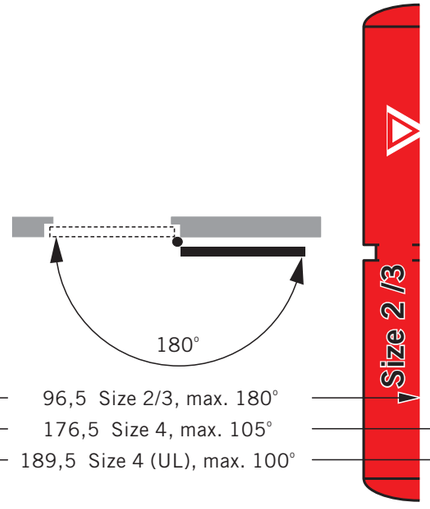

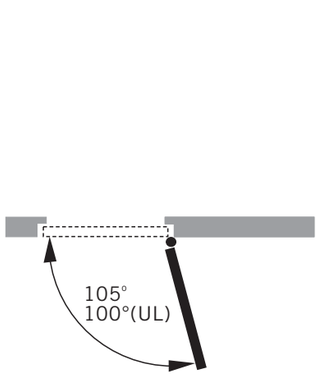

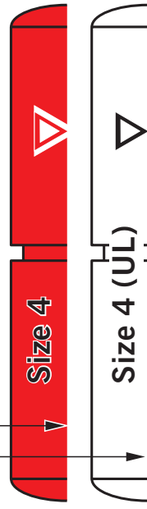

96,5 Size 2/3, max. 180°
176,5 Size 4, max. 105°
189,5 Size 4 (UL), max. 100°

Size 2

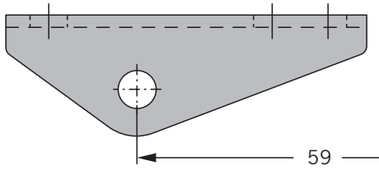

Size 3
Size 4

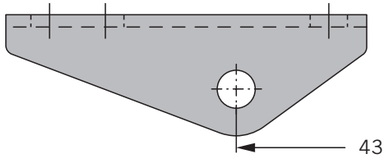

Size 4 (UL)

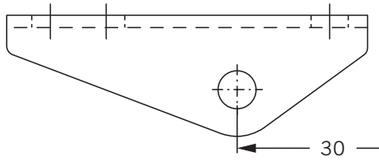

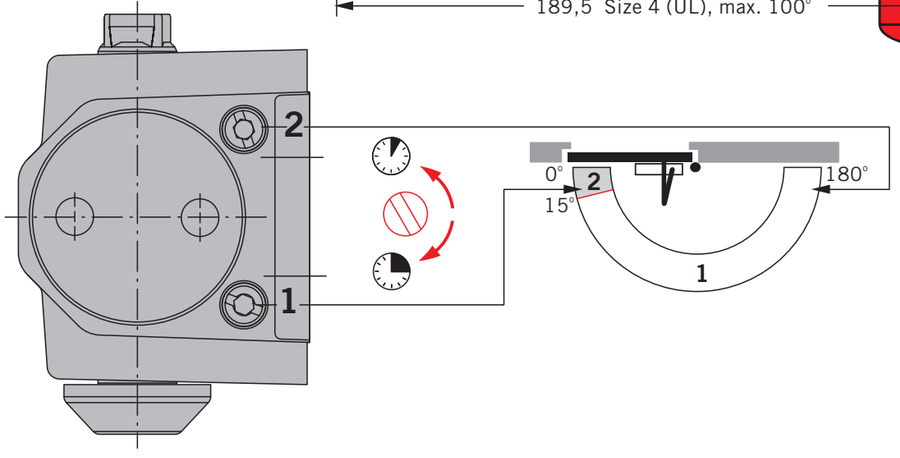

	A max.
Size 2 / Size 2 (UL)	≤ 850 mm
Size 3 / Size 3 (UL)	≤ 950 mm
Size 4 / Size 4 (UL)	≤ 1100 mm

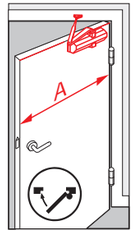

Änderungen vorbehalten
Subject to change without notice

DORMA GmbH + Co. KG DORMA Platz 1 D-58256 Ennepetal Tel. +49 2333 793-0 Fax +49 2333 793-4950
www.dorma.com

TS COMPAKT

WN 058358 45532, 10/12

	A max.
Size 2 / Size 2 (UL)	≤ 850 mm
Size 3 / Size 3 (UL)	≤ 950 mm
Size 4 / Size 4 (UL)	≤ 1100 mm

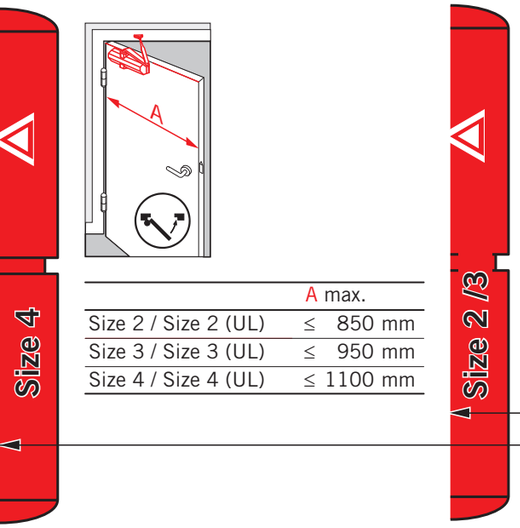

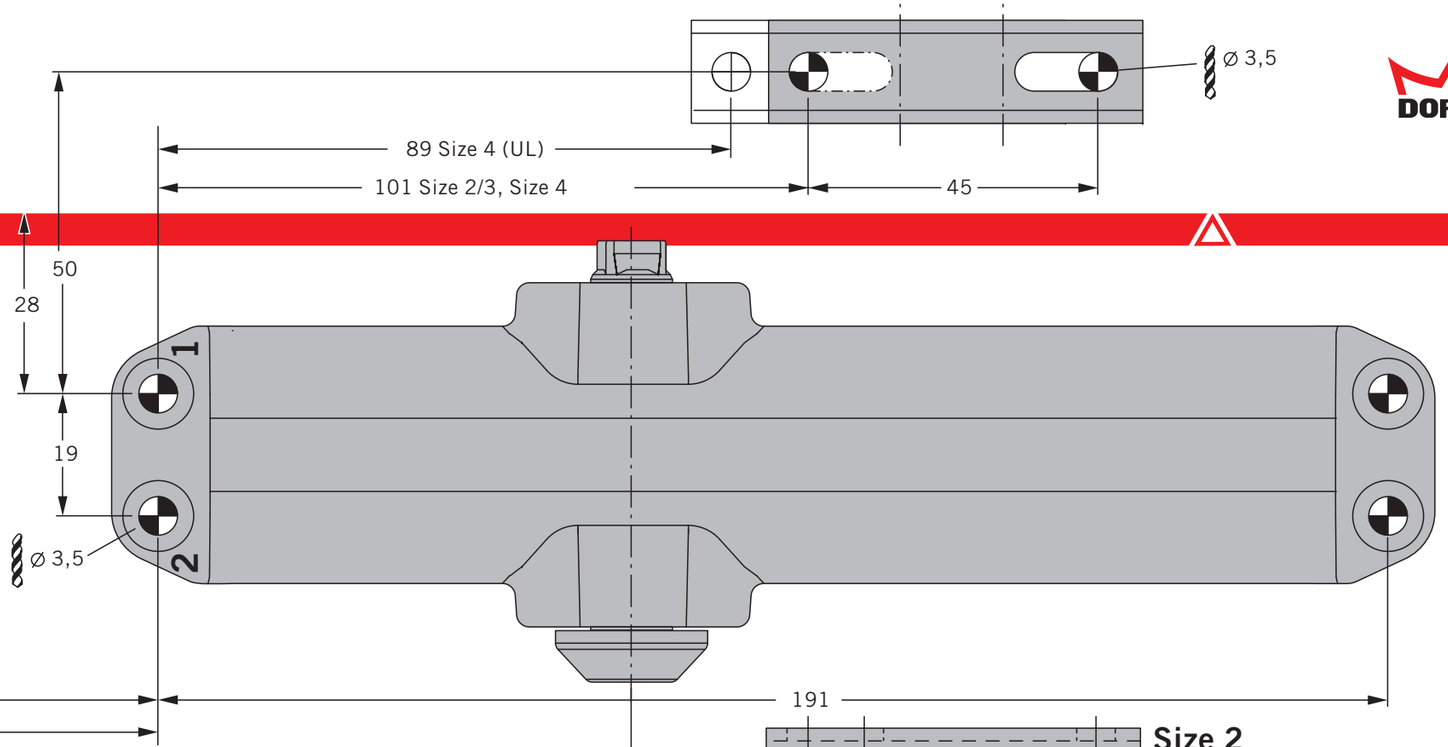

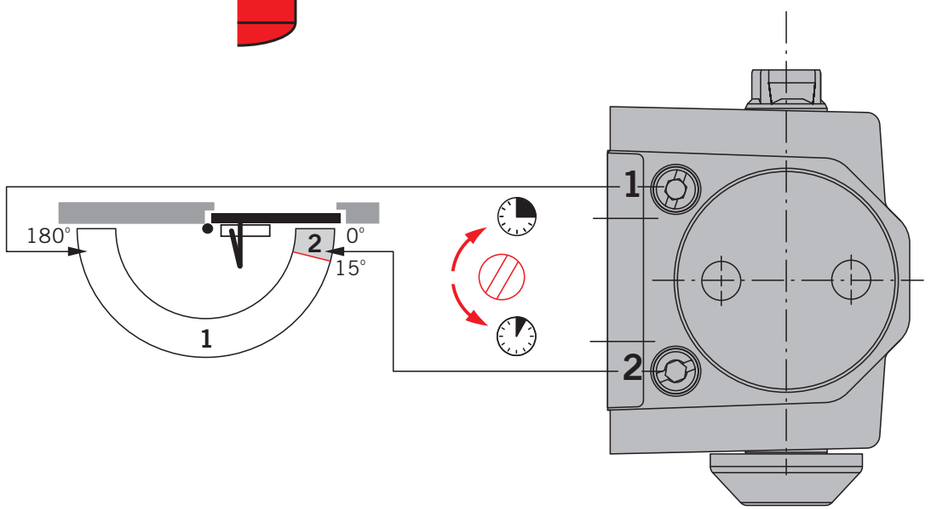

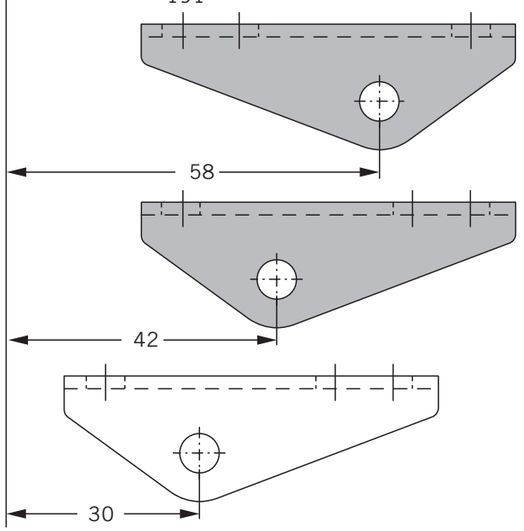

Size 2

Size 3
Size 4

Size 4 (UL)

TS COMPAKT

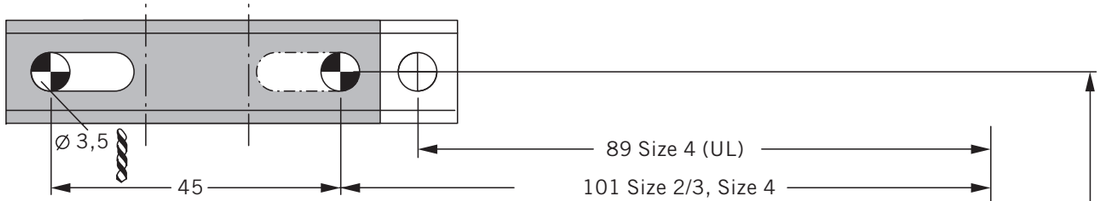

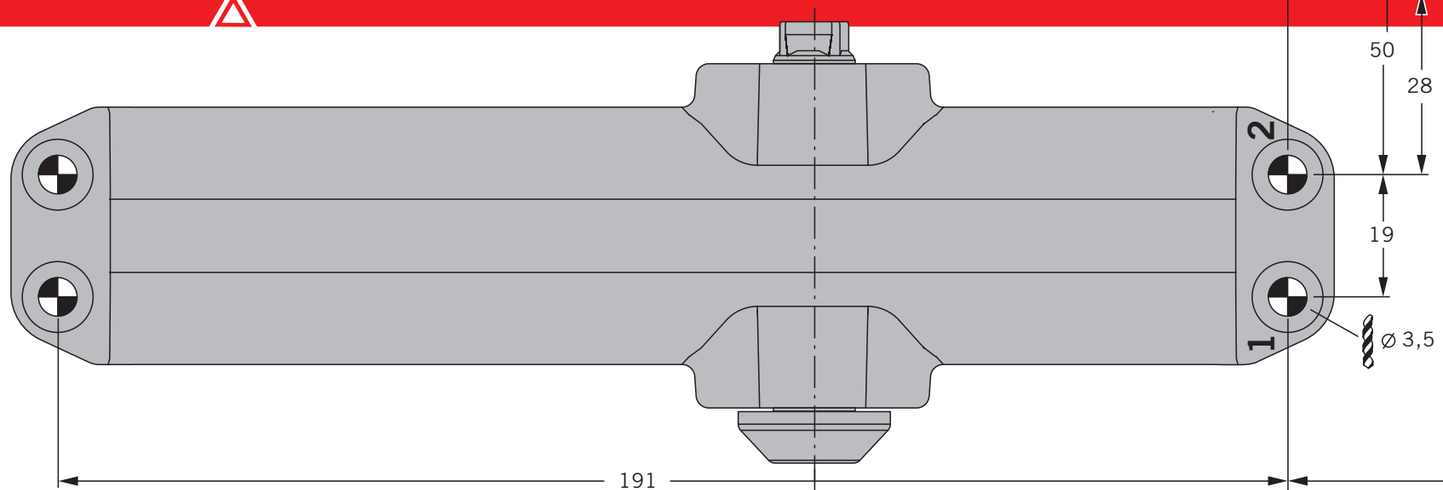

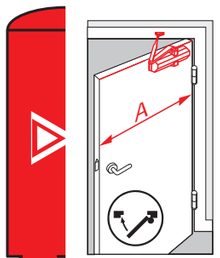

	A max.
Size 2 / Size 2 (UL)	≤ 850 mm
Size 3 / Size 3 (UL)	≤ 950 mm
Size 4 / Size 4 (UL)	≤ 1100 mm

Size 2 /3

Size 4

Size 2

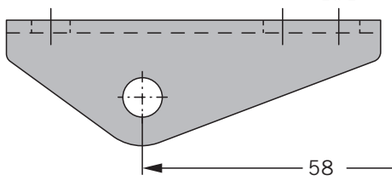

Size 3
Size 4

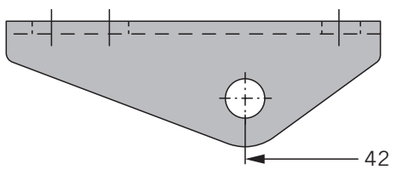

Size 4 (UL)

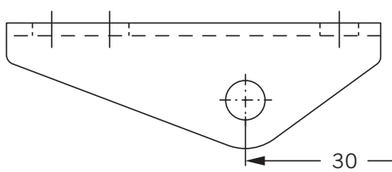

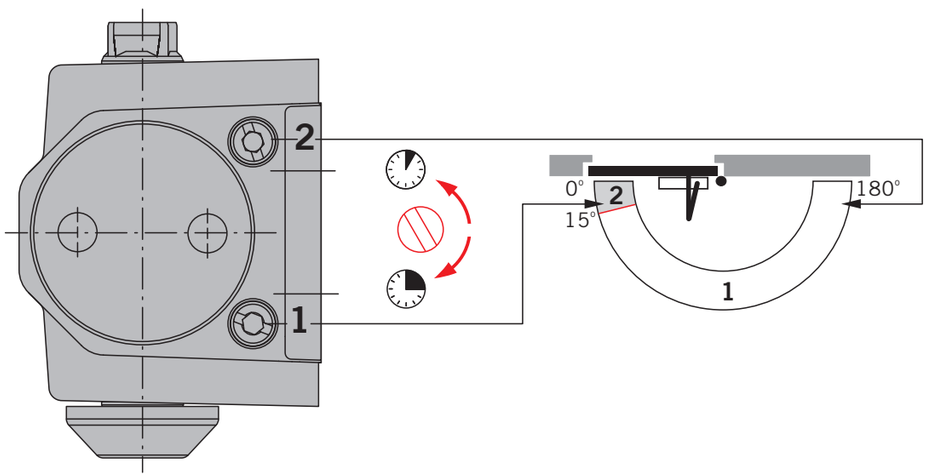

Änderungen vorbehalten
Subject to change without notice

DORMA GmbH + Co. KG DORMA Platz 1 D-58256 Ennepetal Tel. +49 2333 793-0 Fax +49 2333 793-4950
www.dorma.com